ROYALAXE

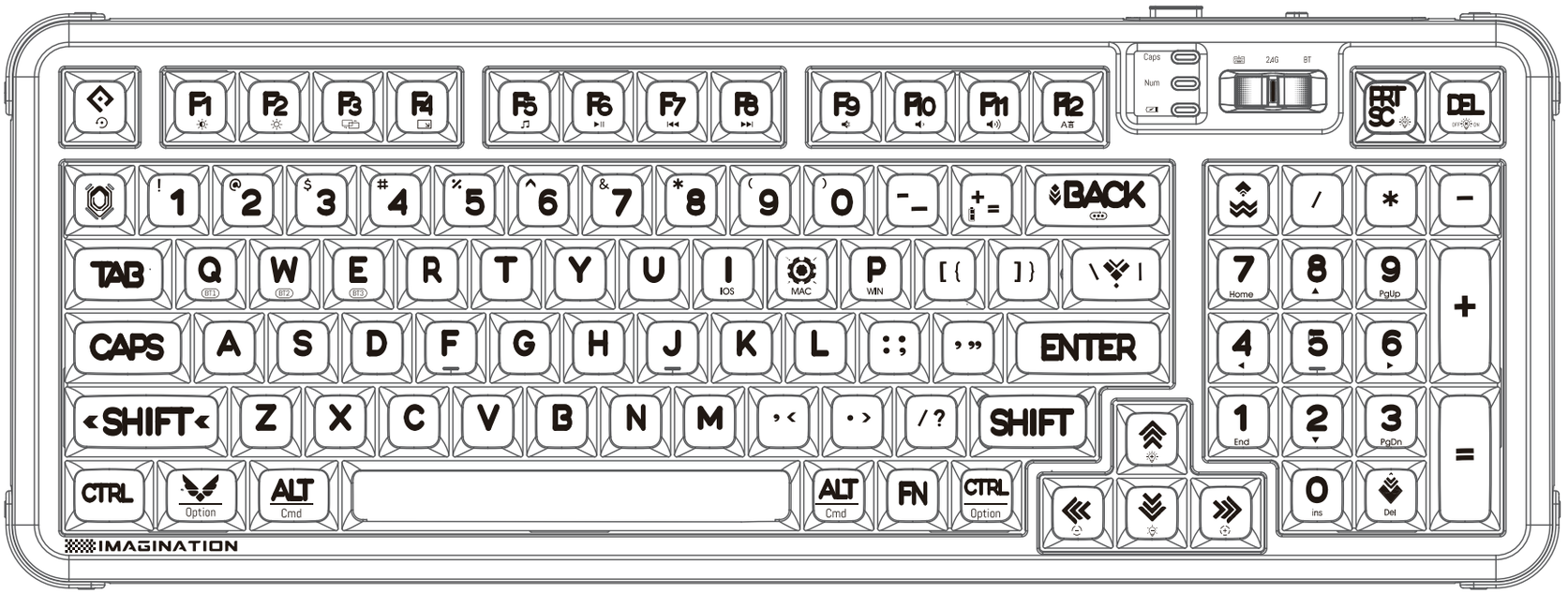

御斧® A98

蓝牙3.0/蓝牙5.0/2.4G/有线三模机械游戏键盘

BT 3.0/BT 5.0/2.4G/Wired Three Mode Mechanical Gaming Keyboard

使用说明书

USER MANUAL

中文版：

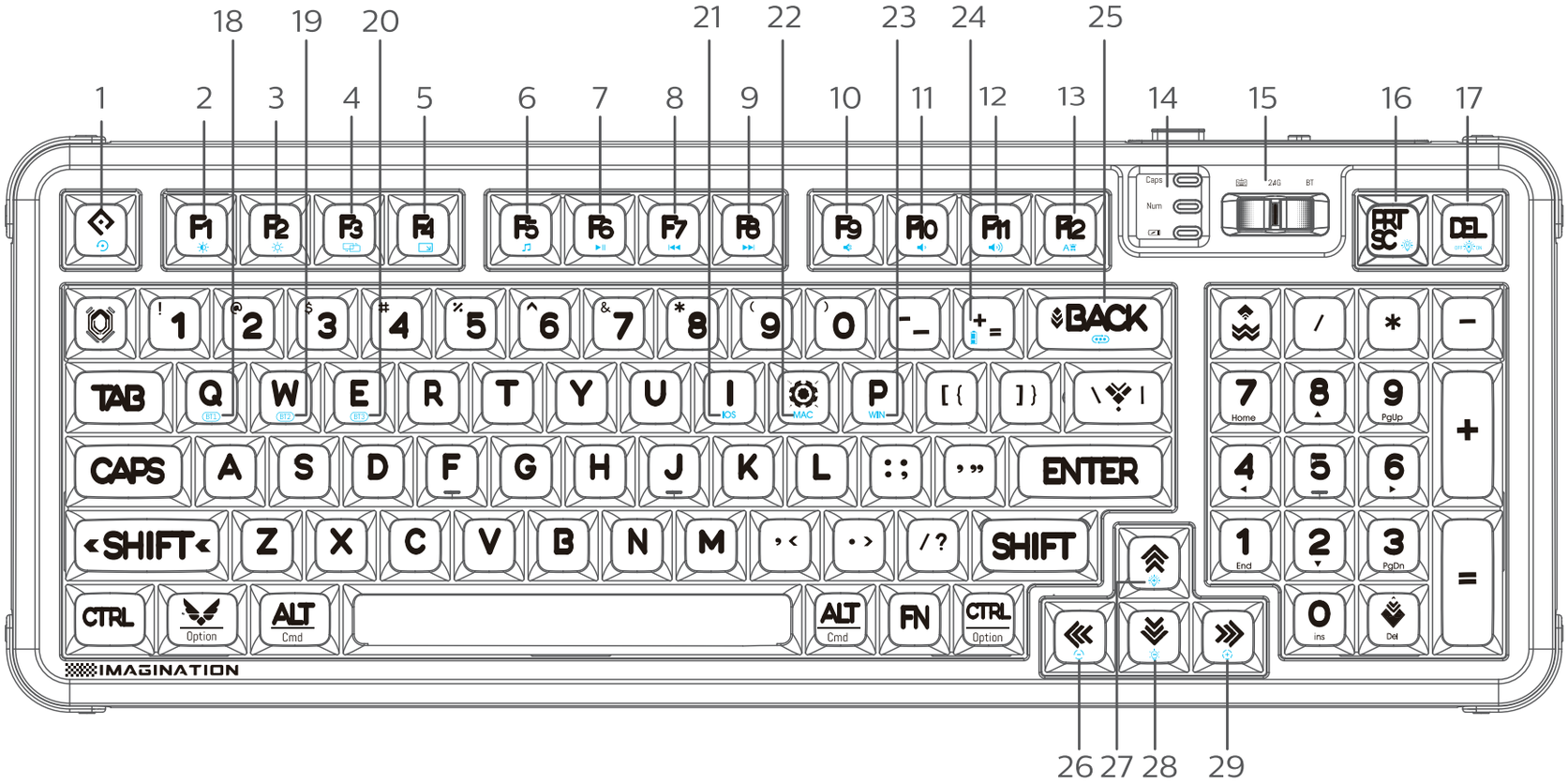
1
2
3
4
5
6
7
8
9
10
11
12
13
14
15
16
17
18
19
20
21
22
23
24
25
26
27
28
29
Caps
Num
2.4G
BT
F1
F2
F3
F4
F5
F6
F7
F8
F9
F10
F11
F12
PRT SC
DEL
BACK
TAB
CAPS
ENTER
SHIFT
CTRL
Option
ALT
Cmd
FN
IOS
MAC
WIN
Home
PgUp
End
PgDn
ins
Del
IMAGINATION

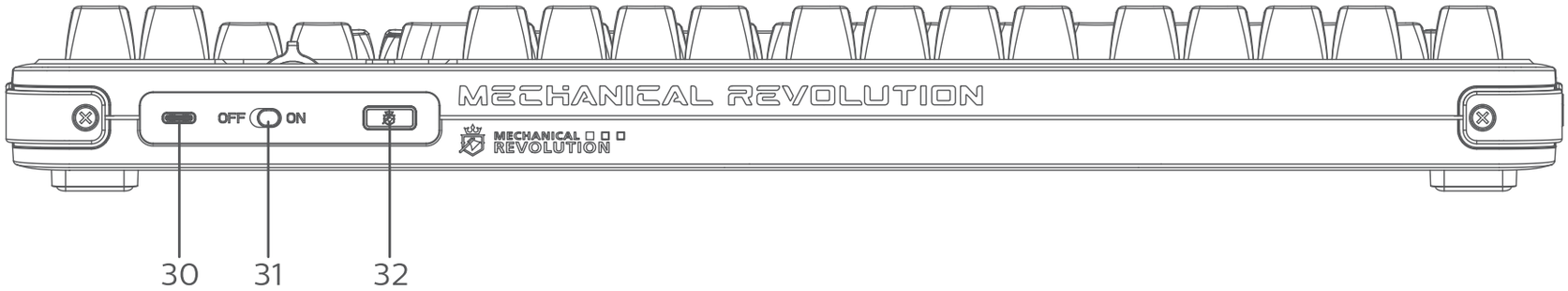
OFF
ON
MECHANICAL REVOLUTION
30
31
32

键盘功能概述:

1. Fn+ : 恢复出厂设置
2. Fn+ : 屏幕调暗
3. Fn+ : 屏幕调亮
4. Fn+ : 多屏显示
5. Fn+ : 返回桌面
6. Fn+ : 媒体播放器
7. Fn+ : 播放/暂停
8. Fn+ : 上一曲目
9. Fn+ : 下一曲目
10. Fn+ : 静音
11. Fn+ : 调低音量
12. Fn+ : 调高音量
13. Fn+ A言: 输入法切换
14. CapI Lock 大小写锁定指示灯
    Num Lock 数字键切换指示灯
    低电压指示灯
15. 有线模式
    2.4G模式
    BT蓝牙模式
16. Fn+ : 切换背光模式
17. Fn+ OFF ON : 灯光开关
18. Fn+ BT1 : 蓝牙模式1
19. Fn+ BT2 : 蓝牙模式2
20. Fn+ BT3 : 蓝牙模式3
21. Fn+ IOS : 切换到IOS系统
22. Fn+ MAC : 切换到Mac系统
23. Fn+ WIN : 切换到Win系统
24. Fn+ : 电量指示
25. Fn+ : 单色光切换
26. Fn+ : 背光频率减慢
27. Fn+ : 背光亮度加
28. Fn+ : 背光亮度减
29. Fn+ : 背光频率加快
30. Type-C充电/有线接口
31. ON/OFF电源开关
32. 2.4G接收器

有线模式连接:

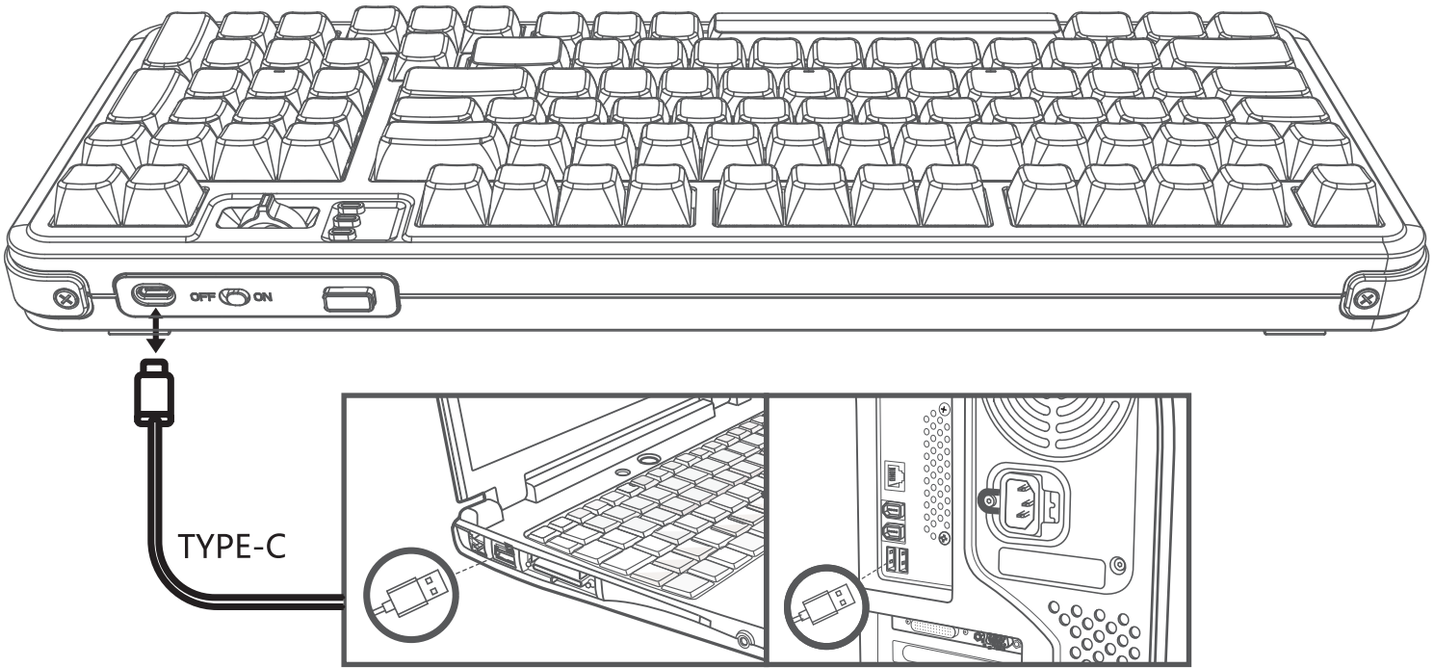

1.充电线TYPE-C接口插入键盘，USB接口连接到您的电脑。

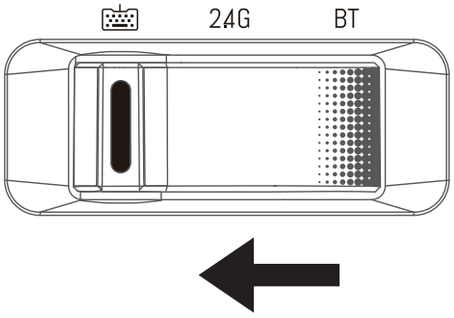

2.旋转到⌨有线模式,Num Lock指示灯闪一下后熄灭，切换成功完成连接。

注意：
TYPE-C有线模式下，“ON/OFF”电源开关没有功能作用.

2.4G模式连接:

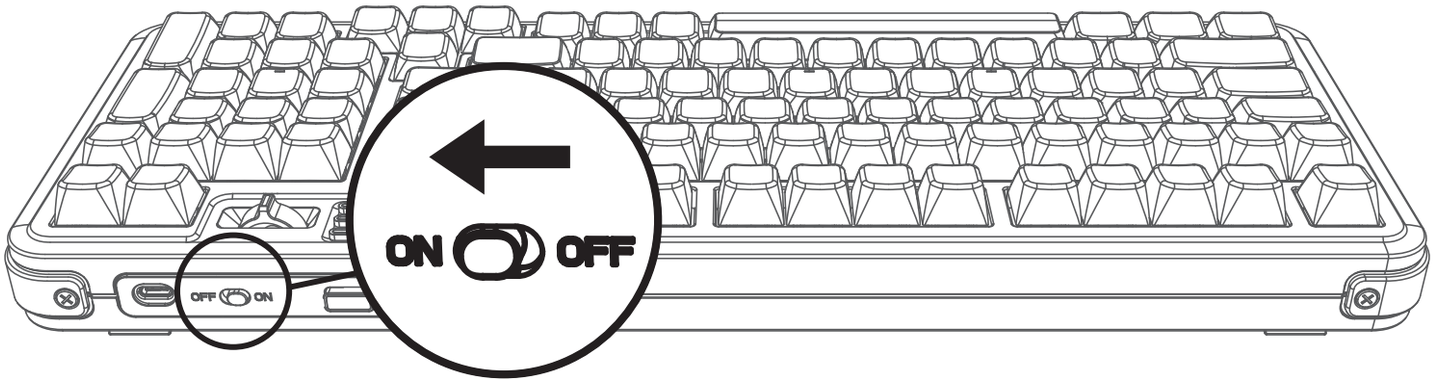

1.打开电源开关至ON。

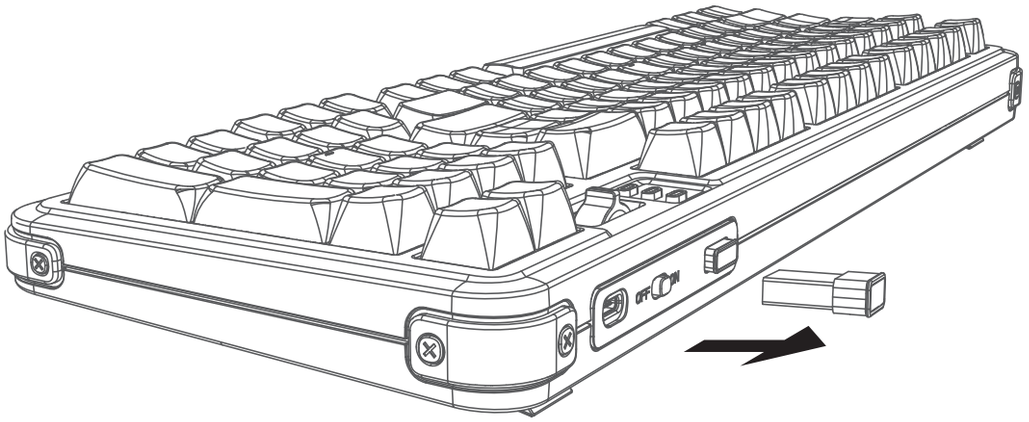

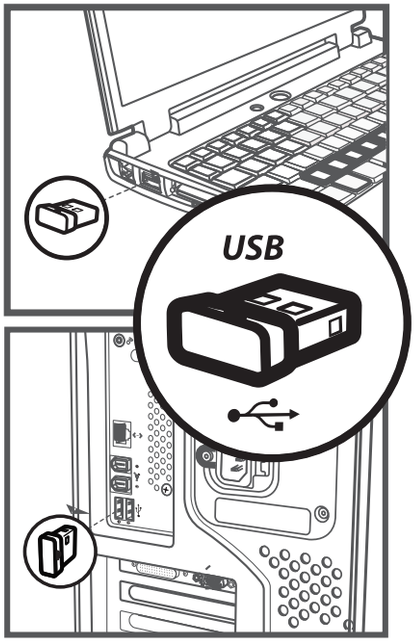

2.取出接收器,插入接收器到电脑USB接口。

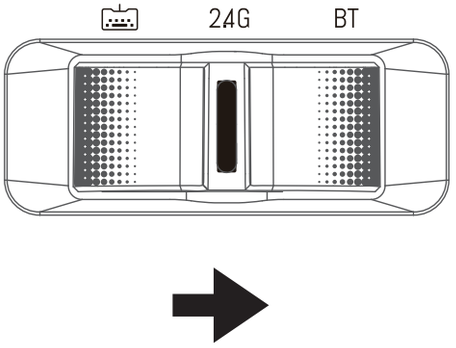

3.旋转模式旋钮到2.4G模式,Num Lock指示灯闪两下后熄灭，切换成功完成连接。

蓝牙模式连接:

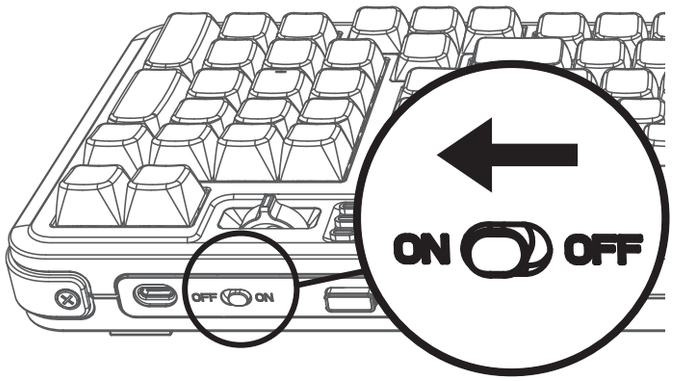

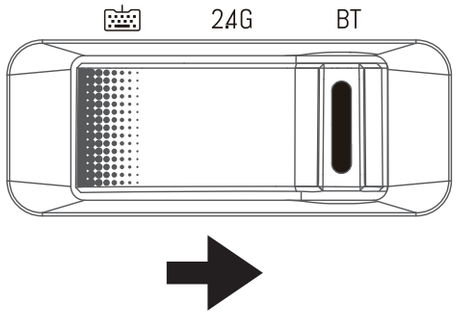

1.打开电源开关至ON，旋转模式旋钮到BT模式,Num Lock指示灯闪三下后熄灭。

如下以连接BT1为例:

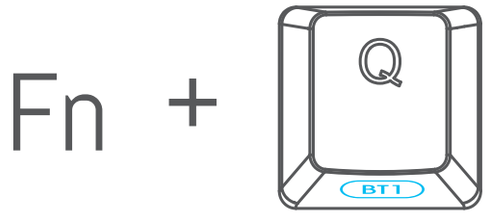

2.长按Fn+Q键键约3-5秒，下方对应的指示灯会快速闪烁，则进入等待蓝牙配对。

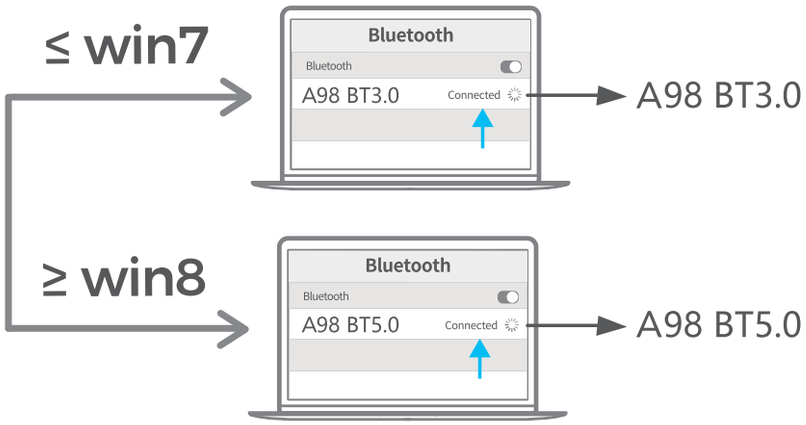

3. 打开您的电脑或其他设备的蓝牙，搜索和选择“A98 BT3.0"或"A98 BT5.0"并开始蓝牙配对，直到完成连接。

注意:
1. Windows 7及以下的系统版本不支持Bluetooth 5.0;
2. Bluetooths 3.0 对应的设备号为A98 BT3.0, 而Bluetooth 5.0对应的设备号为A98 BT5.0

键盘模式切换方法

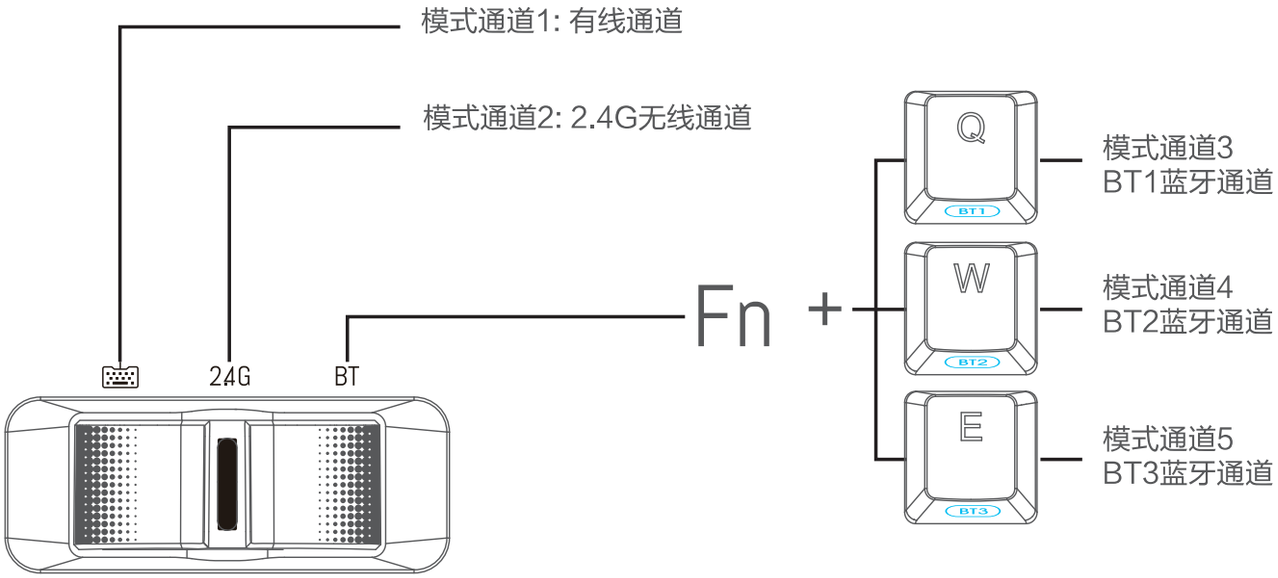

1、模式通道: 键盘有5个通道，BT1、BT2、BT3、2.4G、有线，可同时连接5个设备。

2、模式切换旋钮: 旋转模式切换旋钮在有线/2.4G/BT之间切换。BT模式下按Fn+Q、W或E，可以在BT1、BT2、BT3切换不同蓝牙通道。

IOS/Mac/Win布局切换

短按切换系统布局

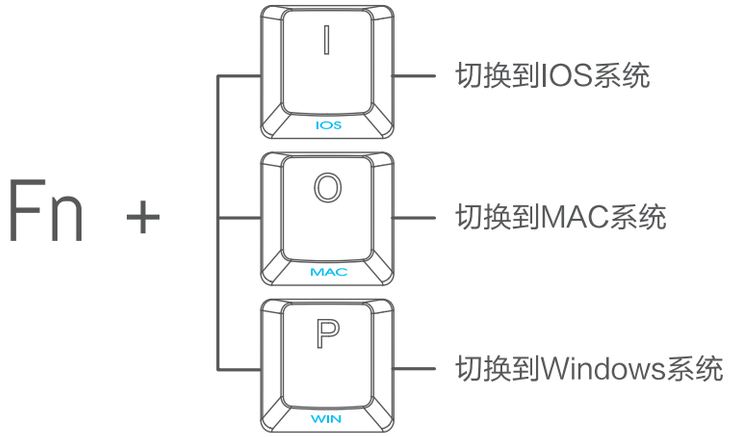

注: 默认为Windows 键盘布局。

Company website

制造商：东莞市灵捷电子科技有限公司
Manufacturer: Dongguan Lingjie Electronics & Technology Co., Ltd
地址：广东省东莞市谢岗镇振兴北路23号
Address: No. 23 Zhenxing North Road, Xiegang Town,
Dongguan,Guangdong, China
公司官网Web: www.royalaxe.cn
执行标准Execution Standard: GB/T14081-2010

廢電池
請回收

Made in China

充电指导:

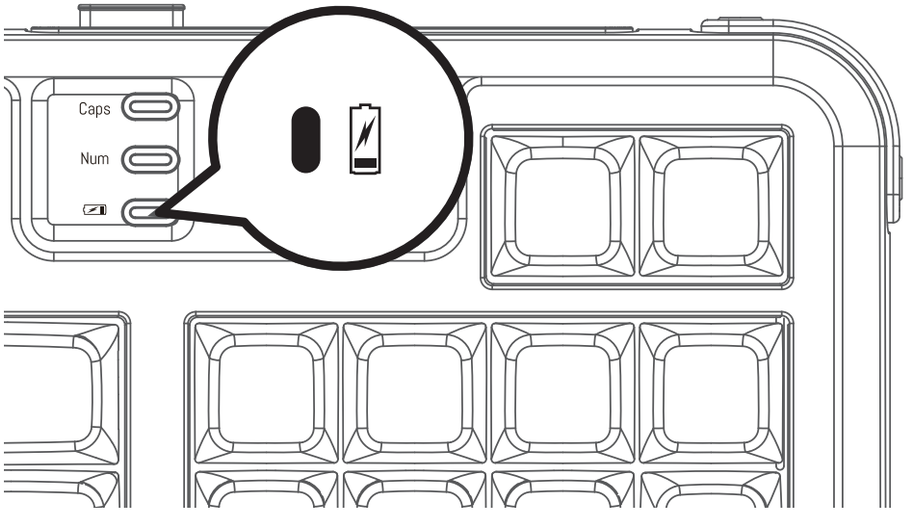

1.低电压提醒：灯闪烁红色，提醒电压低。

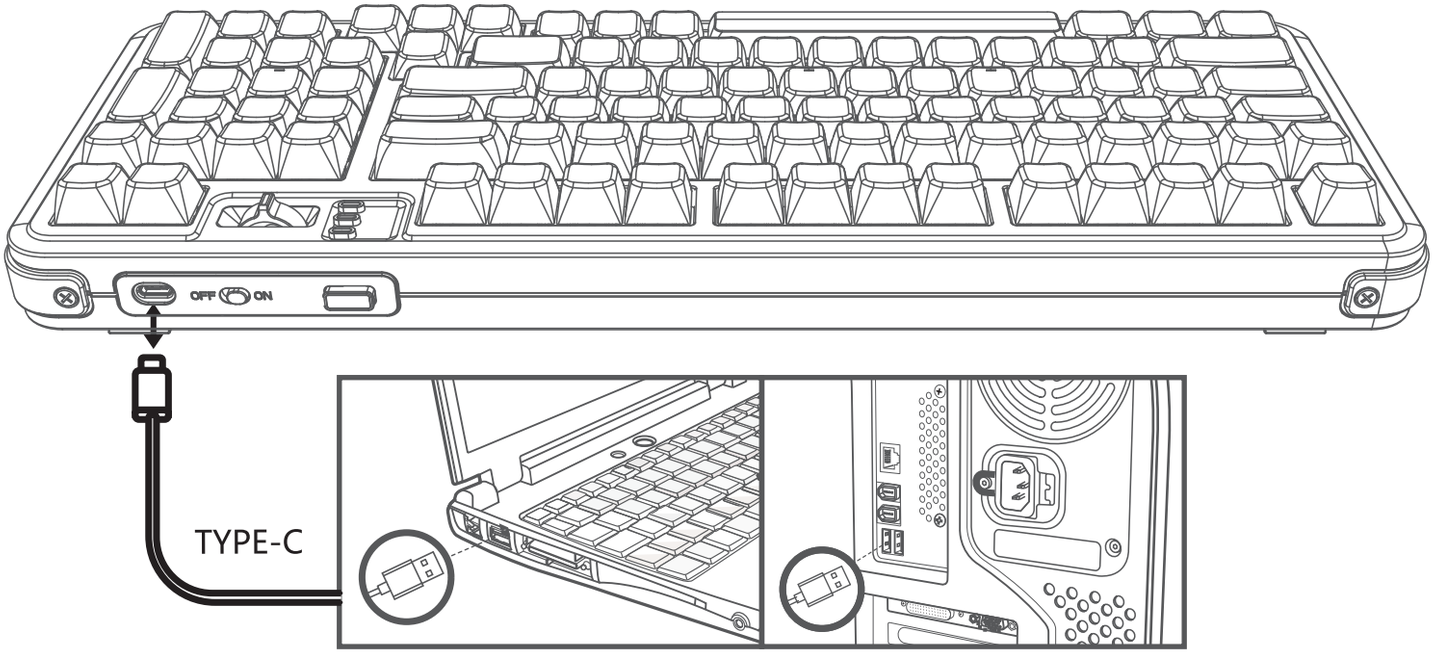

2.充电线TYPE-C接口插入键盘，USB接口连接到您的电脑开始充电，充电过程 灯红灯常亮。

3.充电完成 灯亮绿灯。

注意：
插线充电过程中各模式不受“ON/OFF”开关控制，由充电线直接供电。

自定义驱动

自定义模式请扫码下载官方驱动程序或：
www.royalaxe.cn

温馨提示：驱动程序仅支持有线和2.4G模式下自定义。

技术规格

–连接方式：有线 / 2.4GHz / 蓝牙3.0 / 蓝牙5.0
–无线有效距离：2.4GHz约15米 / 蓝牙约10米
–工作电流电压: 5V ⎓ 500mA(max)
–键盘按键数：98
–键帽材质：PBT
–机械轴寿命：8000万次
–锂电池：4000mA
–键盘产品尺寸：399x148x42mm
–重量：1460.5g ± 20g

系统要求

-1 x USB端口
-蓝牙3.0/蓝牙5.0
-Windows® 7,Windows® 8,Windows® 10或更高版本, Android 3.2或更高版本；
Mac OS 10.5或更高版本

注意：不同系统版本中的多媒体功能会有部分无效。

故障排除

1. 确保将产品的USB 无线接收器正确插入到电脑的USB端口。
2. 确保电脑满足最低系统要求。
3. 产品和无线接收器超出有效连接距离，请减少产品和接收器之间的距离。

注意

–清洁产品请使用干燥、柔软的棉织品等。
–不要折叠弯曲本产品。
–不要强行拆卸本产品。
–不要淋雨或暴晒或火烤。
–不要直接用水冲洗
–基于USB协议，键盘额定充电电压为5V，请使用电脑USB接口对键盘进行充电，禁止使用充电器对键盘充电。
–产品使用过程中禁止液体流入产品内部，造成产品线路短路引起电性不良。

轴体更换方法:

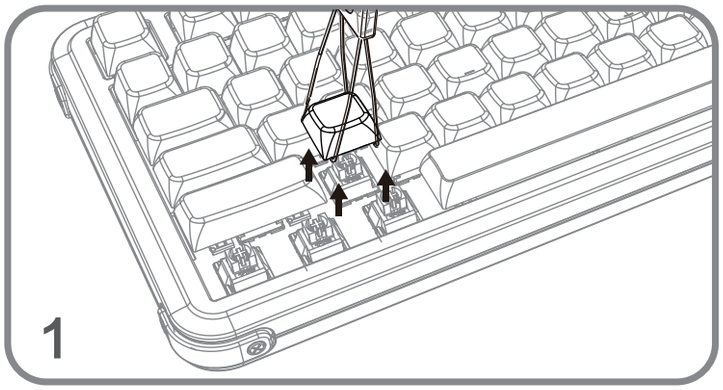

用拔键器取下键帽。

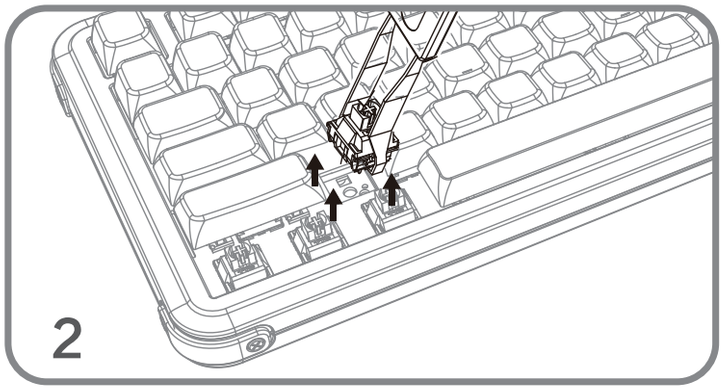

用拔轴器将轴体拔出。

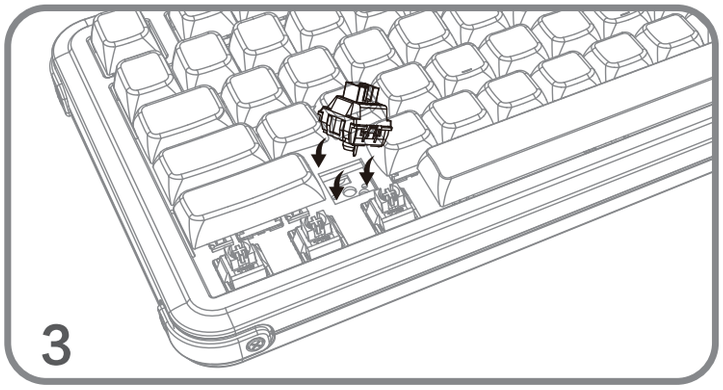

将要换的轴校对安装位置，对齐孔位。

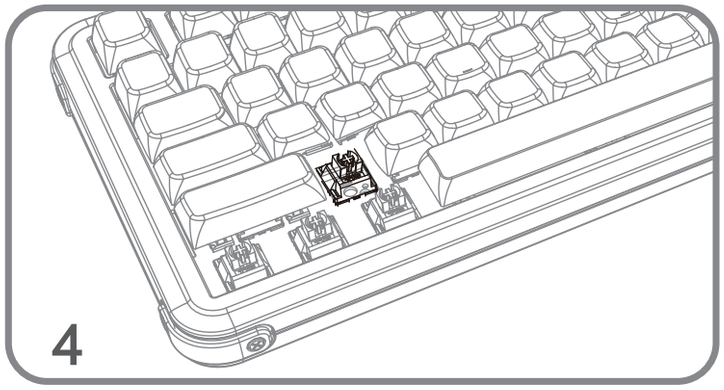

将新轴放置在卡位上。

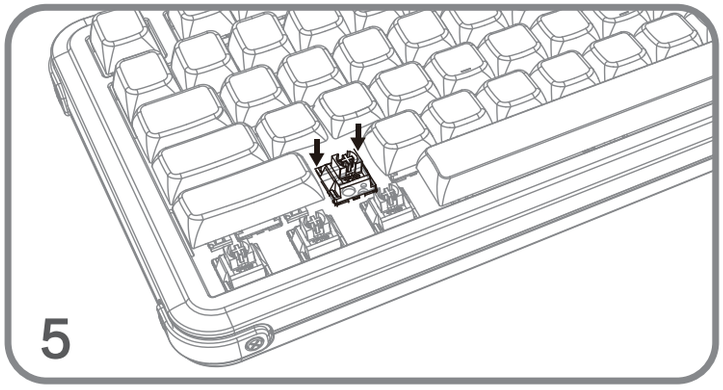

轻按新轴装入卡位内。

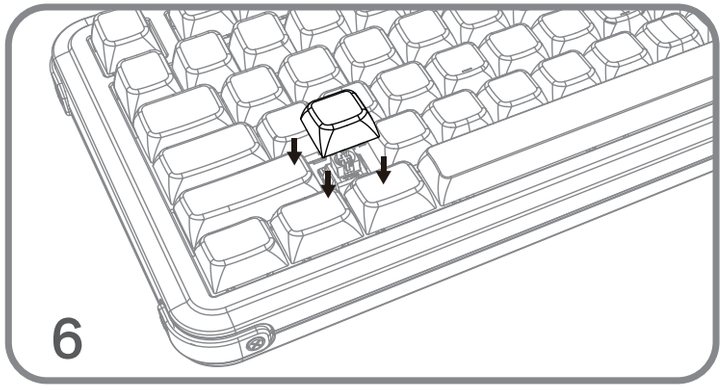

装上键帽，即可正常使用。

重要安全性和合规性信息

产品和包装材料的废弃

废旧电气和电子设备

产品或其包装上的这一标记表明，根据欧洲指令2012/19/EU对废旧电器和电子产品的管理，该产品不能与普通生活垃圾一起处理。你有责任通过指定的废旧电器及电子设备收集处处置这些设备。正确处理废旧产品将有助于防止对环境和人类健康造成潜在的负面后果。

CE 符合性声明

此设备符合在电磁兼容指令 (2014/30/EU)、RoHS 指令 (2011/65/EU) 和无线电设备指令 (2014/53/EU) 方面协调统一各成员国法律的理事会指令所规定的要求（针对无线电设备）。

此产品经检测证实，符合与信息技术设备相关的协调标准，这些协调标准依照欧盟官方公报的指令进行发布。

中国 RoHS

根据中国大陆《电器电子产品有害物质限制使用管理办法》（也称为中国大陆RoHS），以下部分列出了本产品中可能包含的有害物质的名称和含量。

部件名称	有害物质					
	铅（Pb）	汞（Hg）	镉（Cd）	六价铬（Cr(VI)）	多溴联苯（PBB）	多溴二苯醚（PBDE）
电缆线电源	×	○	○	○	○	○
电路板组件	×	○	○	○	○	○
塑料/其他部件	○	○	○	○	○	○
玻璃部件	×	○	○	○	○	○
金属部件	×	○	○	○	○	○
电池	×	○	○	○	○	○

本表格依据SJ/T 11364 的规定编制。

○：表示该有害物质在该部件所有均质材料中的含量均在GB/T 26572 规定的限量要求以下。

×：表示该有害物质至少在该部件的某一均质材料中的含量超出GB/T 26572 规定的限量要求。

备注：以上“×”的部件中，部分含有有害物质超过是由于目前行业技术水平所限，暂时无法实现替代或减量化。因型号不同，产品可能不包括上述所有部件，请以产品实际销售配置为主。

10 本产品的环保使用期限为10年。 5 电池部分的环保使用期限为5年。 10 5 环保使用期限

环保使用期限的参考标准，取决于产品正常工作的温度和湿度等条件。

电器电子产品有害物质限制使用管理办法说明：该电器电子产品含有某些有害物质，在环保使用期限内可以放心使用，超过环保使用期限之后应该进入回收循环系统。《废弃电器电子产品回收处理管理条例》提示性说明为了更好地关爱及保护地球，当用户不再需要此产品或产品寿命终止时，请遵守国家废弃电器电子产品回收处理相关法律法规，将其交给当地具有国家认可的回收处理资质的厂商进行回收处理，不当利用或者处置可能会对环境和人类健康造成影响。

ROYALAXE

保修卡

尊敬的客户:
整机自购买日期开始一年内，针对产品包装内所有的硬件产品，若出现质量问题，将为持此保修卡用户提供免费保修服务，其余保修条例按国家《微型计算机商品修理更换退货责任规定》。同时此服务仅限于出现质量问题的产品，而不包括赔偿购买者利益损失及其他意外情况造成的任何直接或间接损失。

属于下列情况之一的产品，不实行三包：
1.无有效三包凭证及有效发票的（能够证明该产品在三包有效期内的除外）或超过三包有效期的或擅自涂改三包凭证的。
2.三包凭证上的产品型号和编号与产品实物不相符合的。
3.产品上的型号、序列号或生产日期代码已被更改、删除或难以辨认。
4.缺陷是超出预期用途的过度使用造成的，例如在商业环境中不停地使用。
5.未按产品使用说明的要求使用，维护，保管而造成损坏的。
6.在使用过程中，使用盗版软件或计算机病毒造成的损坏。
7.未经授权的维修服务点或人员对产品进行修理或改动的。
8.因不可抗力造成损坏的。
9.产品在使用过程中，因意外、信号干扰或其他影响因素造成的无线连接丢失而不能正常工作。
10.正常磨损缺陷，或自然损耗件。
11.产品因未在最初设计、制造或批准使用的国家/地区使用而无法正常工作，进口产品可能会出现这种情况。

保修办法:
(1)7天内出现质量问题，根据国家“三包”规定于产品外观与包装完整的情况下将硬件退还给购买地点，凭购买的有效凭证，退回您所支付的硬件产品货数。
(2)60天内出现产品质量问题，您可以到购买地点更换硬件产品，或者到指定的维修网点保修，更换之后的硬件保质期为保持期剩余的天数。
(3)1年内出现产品质量问题，您可以到指定的维修网点保修 。

商品信息	商品名称	
	产地	
	商品型号	
	出厂编号	
用户信息	用户姓名	
	用户地址	
	联系电话	
	邮编	
销售商信息	销售商名称	
	销售商地址	
	联系电话	
	邮编	
	销售日期	
	发票号码	
	销售商印章	
尊敬的用户，以上信息由销售商负责填写，请您理解和配合，谢谢。 以下的信息由维修单位填写，并最终交还于您。		
维修信息	维修单位名称	
	地址	
	联系电话	
	邮编	
	维修单据号	
	维修日期	
	维修人员签字	

English:

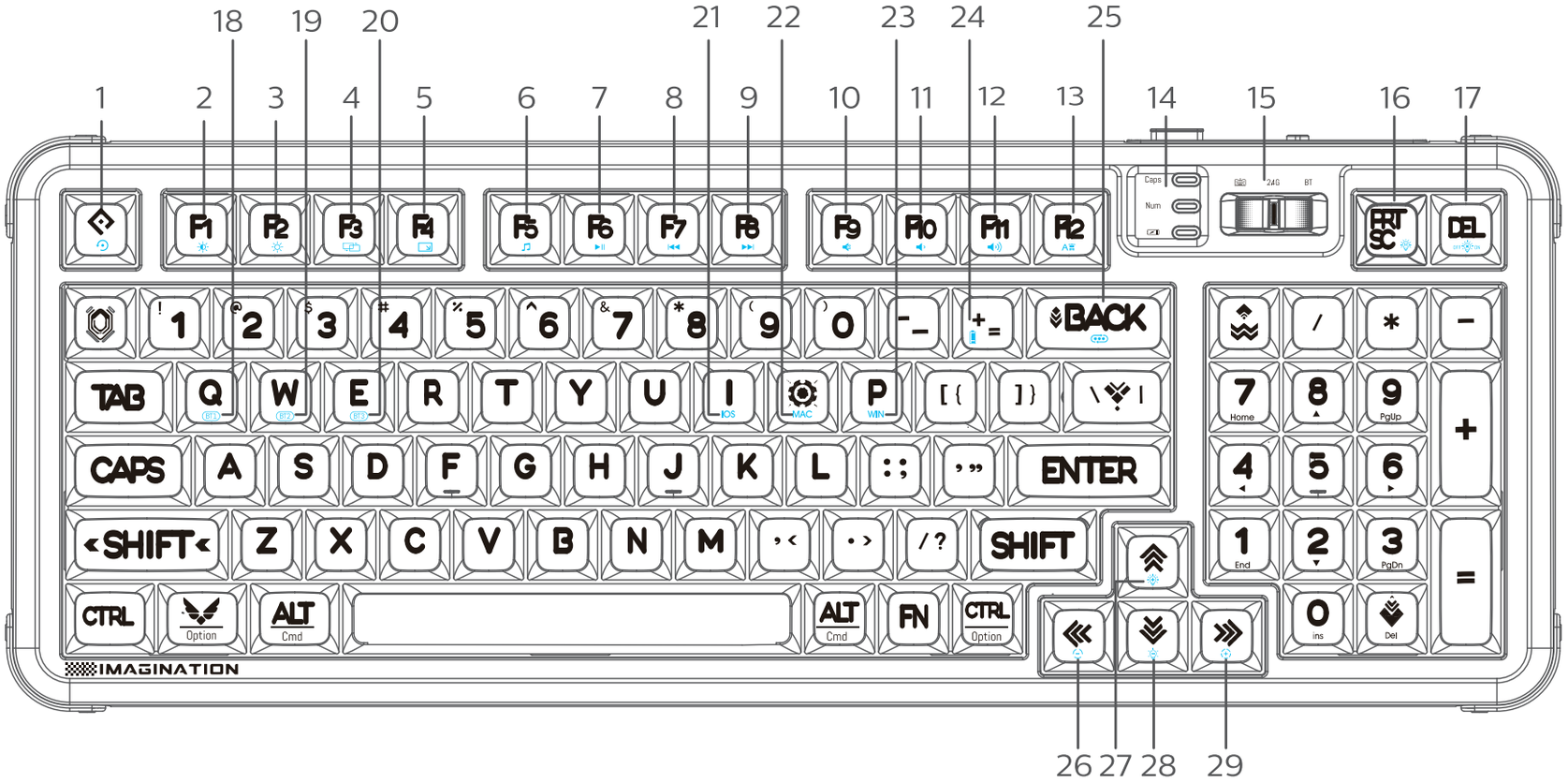
1
2
3
4
5
6
7
8
9
10
11
12
13
14
15
16
17
18
19
20
21
22
23
24
25
26
27
28
29
Caps
Num
2.4G
BT
F1
F2
F3
F4
F5
F6
F7
F8
F9
F10
F11
F12
PRT SC
DEL
BACK
TAB
CAPS
ENTER
SHIFT
CTRL
ALT
Cmd
Option
FN
IOS
MAC
WIN
Home
PgUp
End
PgDn
ins
Del
IMAGINATION

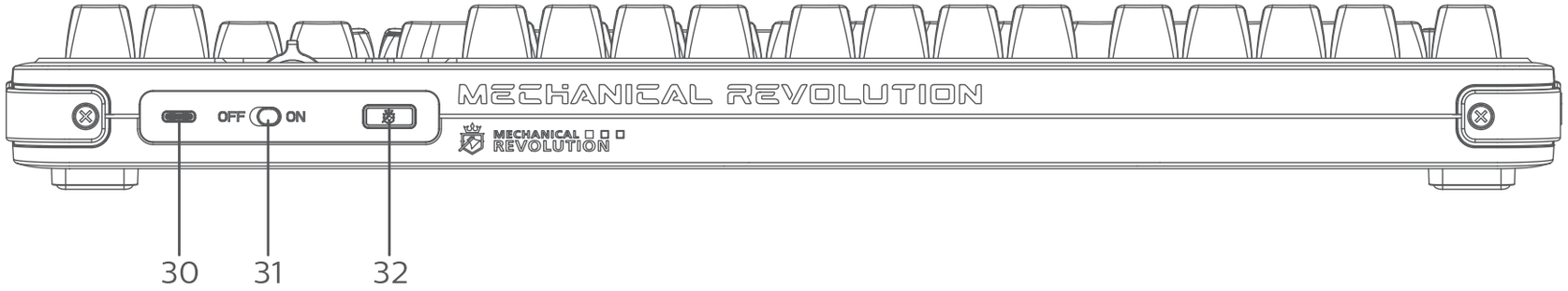
OFF
ON
MECHANICAL REVOLUTION
30
31
32

Function overview of the keyboard

1. Fn+ : Reset
2. Fn+ : Screen brightness −
3. Fn+ : Screen brightness +
4. Fn+ : Multi screen display
5. Fn+ : Back to the desktop
6. Fn+ : Media Player
7. Fn+ : Play/Pause
8. Fn+ : Prev song
9. Fn+ : Next song
10. Fn+ : Mute
11. Fn+ : Volume −
12. Fn+ : Volume +
13. Fn+ : Input method switching
14. Capl Lock Caps lock indicator
    Num Lock Num Lock indicator
    Low battery indicator
15. Wired mode
    2.4G wireless mode
    BT Bluetooth mode
16. Fn+ : Switch the backlight mode
17. Fn+ : Light switch
18. Fn+ BT1 : Bluetooth mode 1
19. Fn+ BT2 : Bluetooth mode 2
20. Fn+ BT3 : Bluetooth mode 3
21. Fn+ IOS : Switch to IOS system
22. Fn+ MAC : Switch to MAC system
23. Fn+ WIN : Switch to WIN system
24. Fn+ : Battery indicator
25. Fn+ : Monochromatic light switching
26. Fn+ : Backlight frequency slows down
27. Fn+ : Backlight brightness increase
28. Fn+ : Backlight frequency slows down
29. Fn+ : Increased backlight frequency
30. Type−C charging/wired interface
31. ON/OFF power switch
32. 2.4G receiver

Wired connection

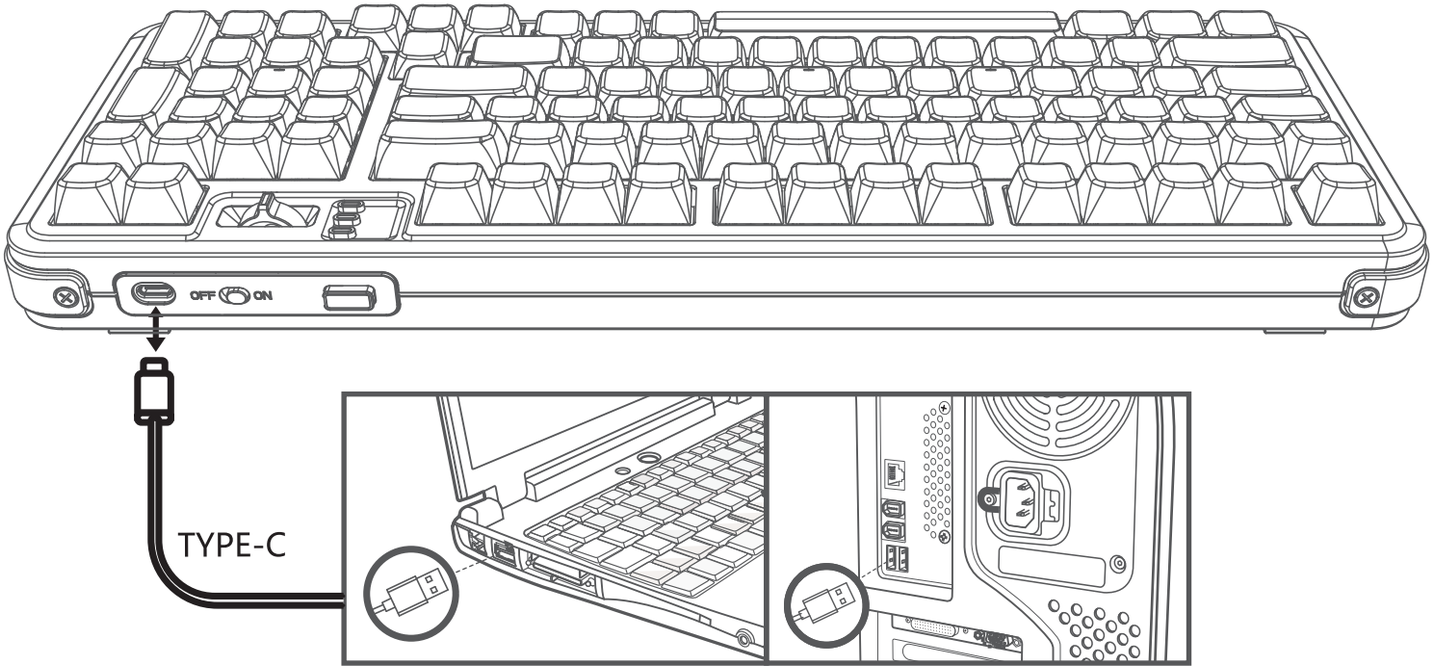

1.Insert the TYPE-C interface of the charging cable into the keyboard, and connect the USB interface to your computer.

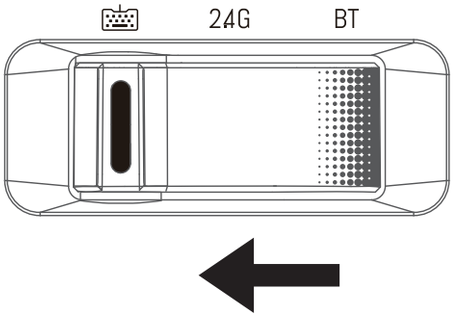

2. Rotate to ⌨ Wired Mode, Num Lock indicator will flash once and then go out, the connection is successfully completed.

Note:
In TYPE-C wired mode, the “ON/OFF” switch has no function.

2.4G connection

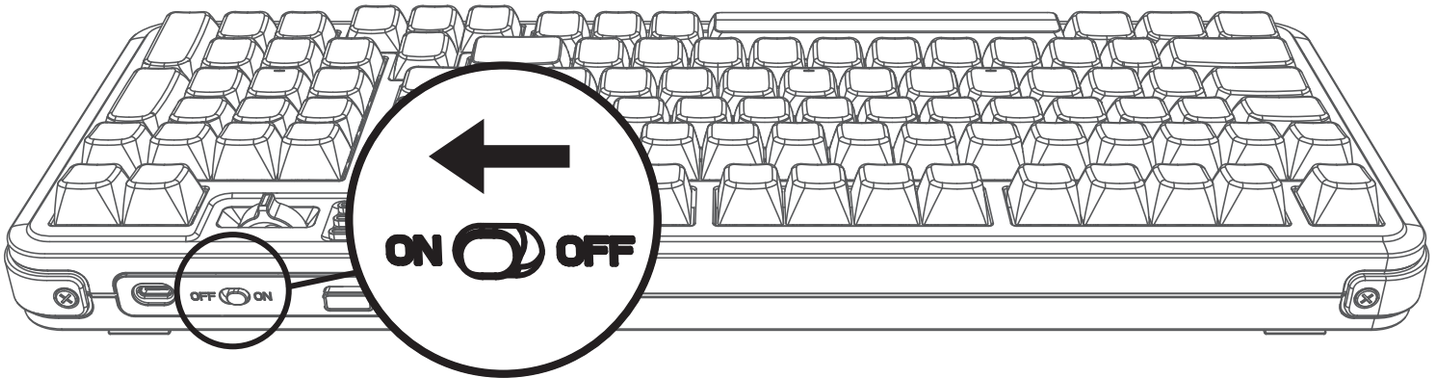

1.Turn the power switch to ON.

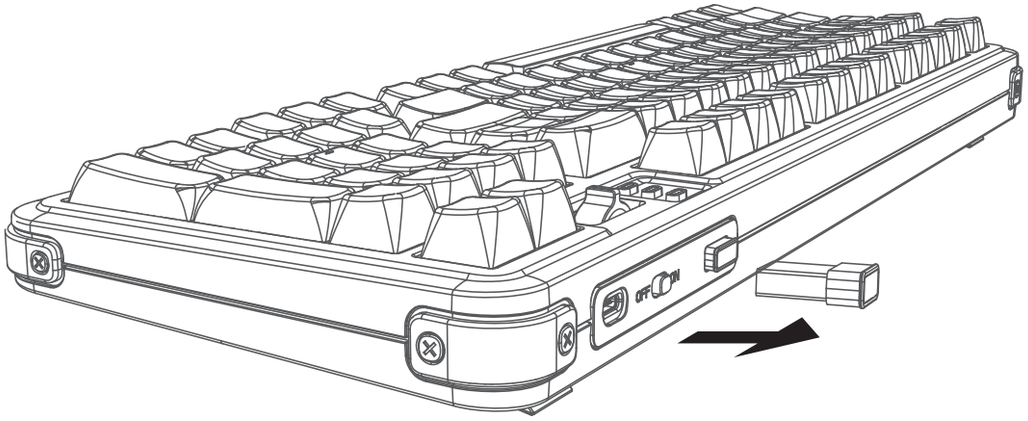

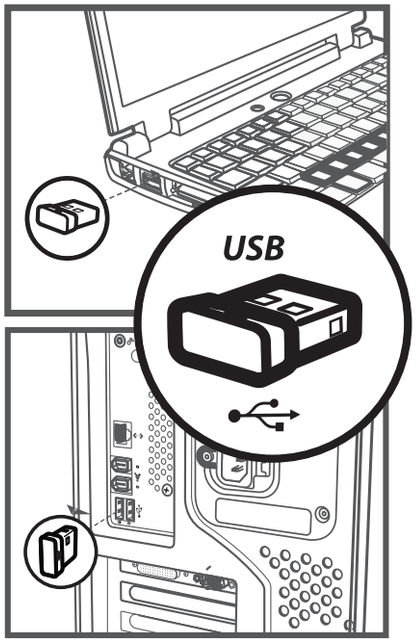

2.Take out the receiver and insert the receiver into the USB port of the computer.

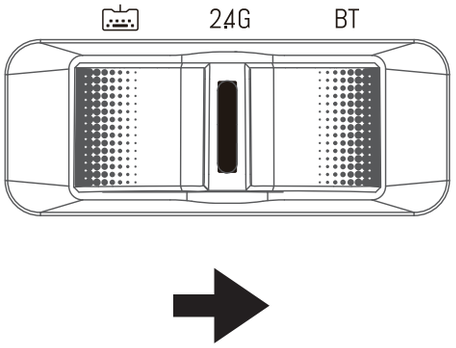

3.Turn the mode rotary knob to 2.4G mode, the Num Lock indicator flashes twice and then goes off, the connection is successfully completed.

Bluetooth connection

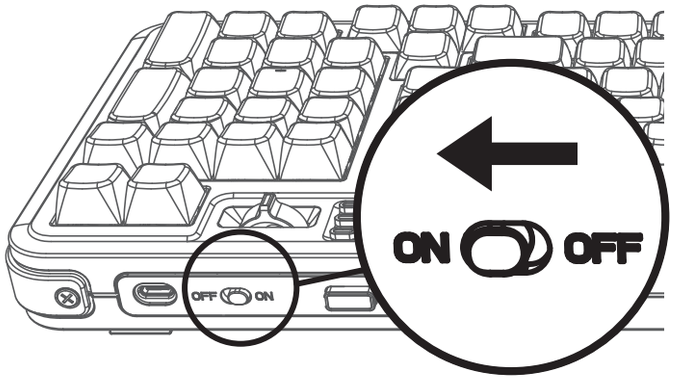

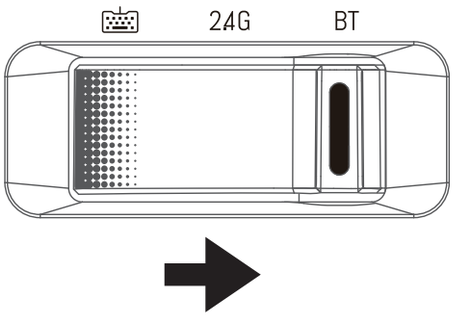

1.Turn the power switch to ON. Turn the mode rotary knob to BT mode, the Num Lock indicator flashes three times and then goes out.

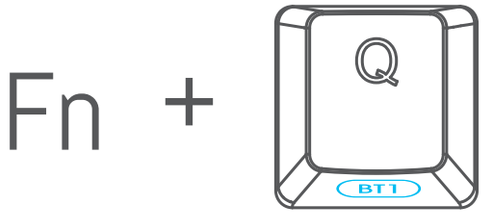

Take the connection to BT1 as an example as follows:

2.Long press the Fn + Q key for about 3-5 seconds, the corresponding indicator light will flash quickly, and then enter the Bluetooth pairing mode.

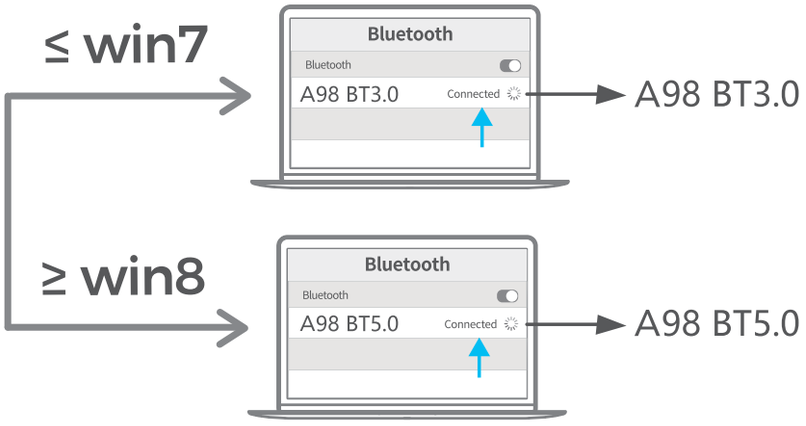

3. Turn on the Bluetooth of your computer or other device, search and select "A98 BT3.0" or "A98 BT5.0" and start Bluetooth pairing until the connection is completed.

Notice:
1. Windows 7 and below system versions do not support Bluetooth 5.0;
2. The device number corresponding to Bluetooths 3.0 is A98 BT3.0, and the device number corresponding to Bluetooth 5.0 is A98 BT5.0

Mode switching method of the keyboard

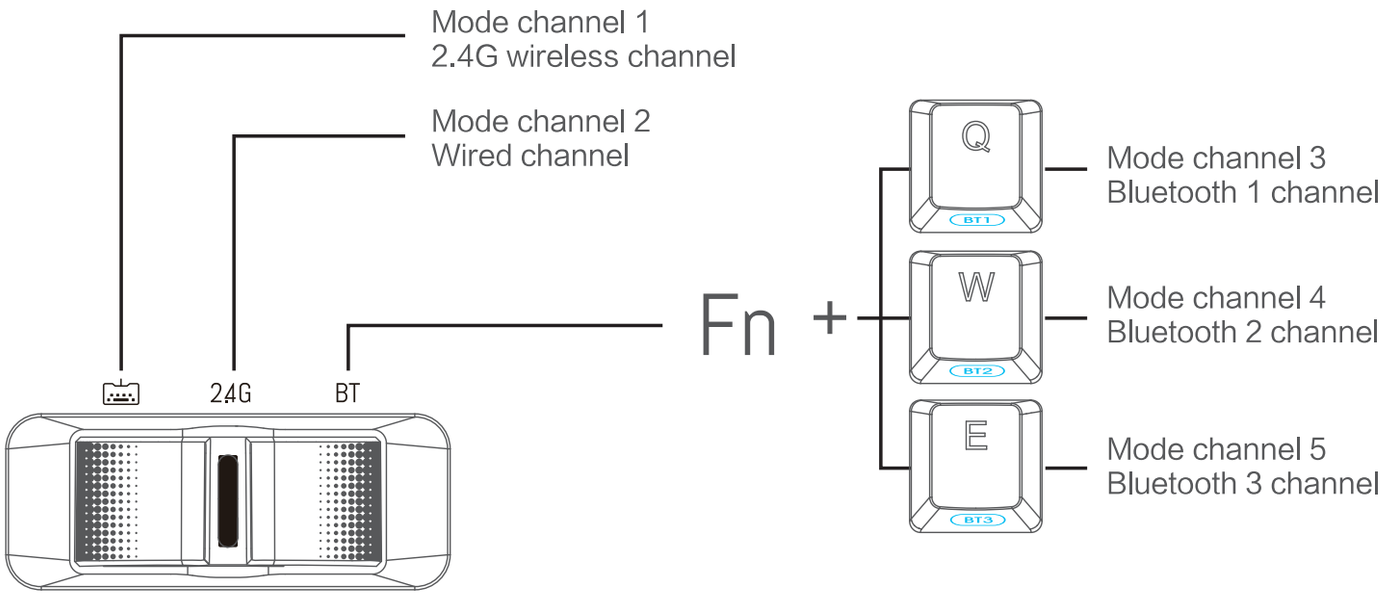

1. Mode channel: The keyboard has 5 channels, BT1, BT2, BT3, 2.4G, wired, and 5 devices can be connected at the same time.

2、Mode rotary knob: Turn the mode rotary knob between Wired/2.4G/BT. Press Fn + Q, W or E to switch between different Bluetooth channels of BT1, BT2 and BT3.

iOS/Mac/Win layout switching

Short press to switch system layout

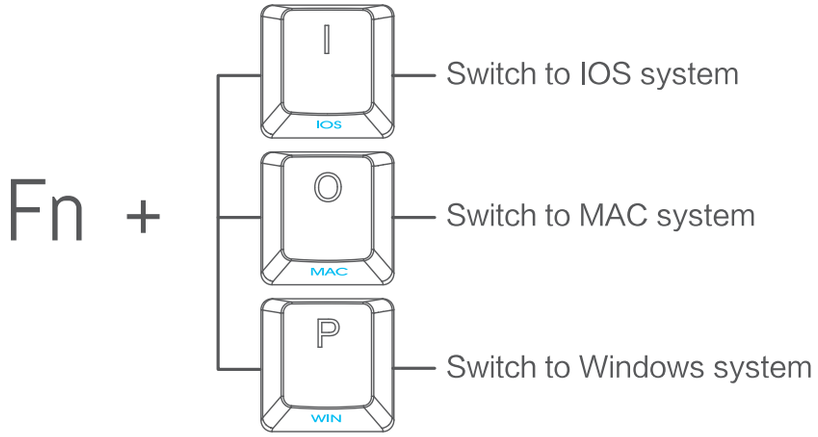

Note: the default setting is Windows layout.

Charging guide:

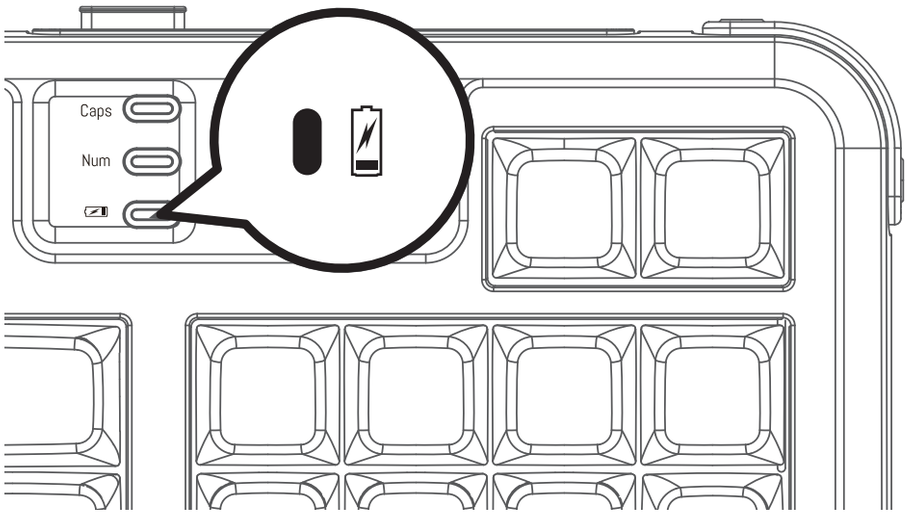

1. Low voltage reminder: flashes red to remind low voltage.

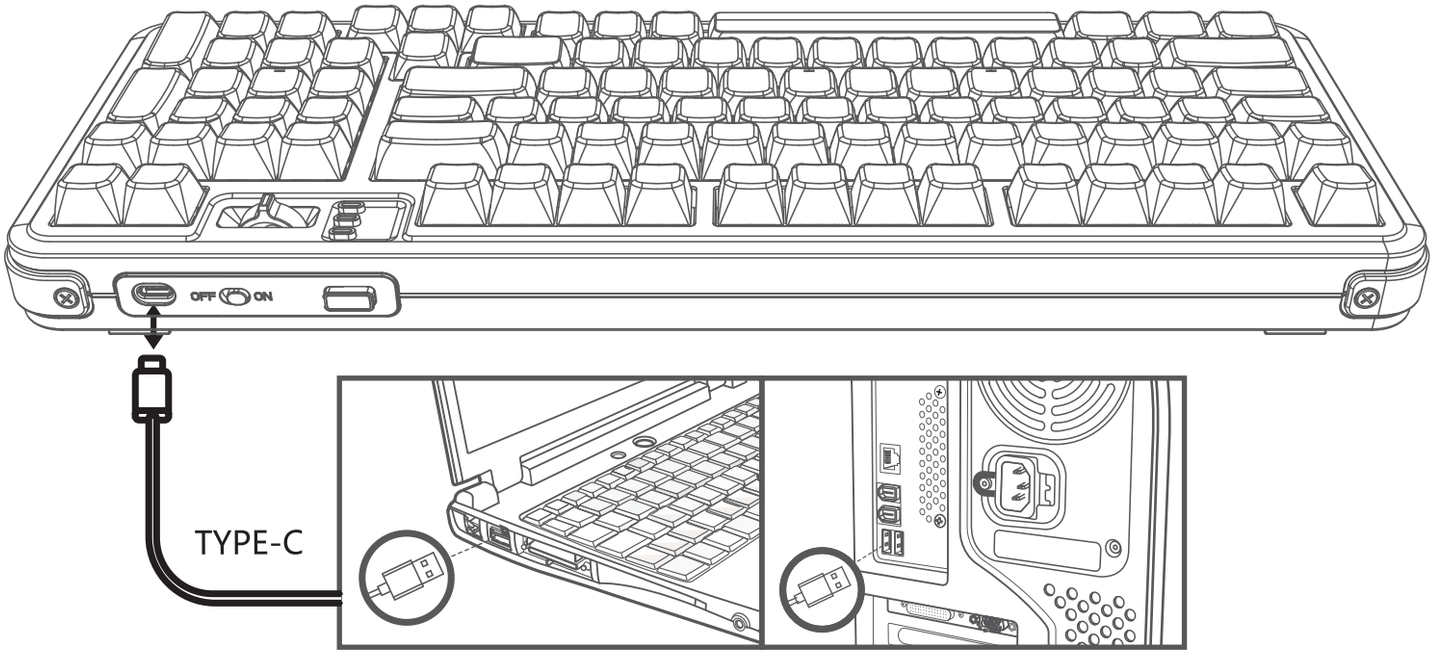

2.Plug the charging cable' TYPE-C interface into the keyboard, USB interface into your computer to start charging, red light is always on during charging process.

3. indicator turns in green after the charging is completed。

Notice:
During the plug-in charging process, every mode is not controlled by the "ON/OFF" switch, and the power supply is directly supplied by the charging cable.

Custom drive

For custom mode, please scan the code to download the official driver:
www.royalaxe.cn

Reminder: The driver only supports customization in wired and 2.4G mode.

Technical specifications

–Connection method: wired / 2.4GHz / Bluetooth 3.0 / Bluetooth 5.0
–Wireless effective distance: 2.4GHz about 15 meters / Bluetooth about 10 meters
–Working current and voltage: 5V ⎓ 500mA(max)
–Keyboard keys: 98
–Keycap material: PBT
–Mechanical switch lifespan: 80 million times
–Lithium battery: 4000mA
–Keyboard product size: 399x148x42mm
–Weight: 1460.5g ± 20g

System requirement

1. 1 x USB port
2. Bluetooth 3.0/Bluetooth 5.0
3. Windows® 7,Windows® 8,Windows® 10 or later,
   Android 3.2 and above; Mac OS 10.5 or later

Note: Multimedia functions are partially invalid in different OS versions.

Trouble shooting

1. Make sure that the USB wireless receiver of the product is correctly plugged into the USB port of the computer.
2. Make sure the computer meets the minimum system requirement.
3. If the distance between the product and the receiver exceeds an effective range, please reduce the distance for better performance.

Attention

1. Please use dry and soft cloth to clean the product.
2. Do not disassemble the product by force.
3. Do not get in the rain or in the sun or fire.
4. Do not flush directly with water.
5. Based on the USB protocol, the rated charging voltage of the keyboard is 5V. Please use the USB interface of the computer to charge the keyboard. It is forbidden to use the charger to charge the keyboard.
6. During the use of the product, it is forbidden for liquid to flow into the product, resulting in short circuit of the product and poor electrical properties.

Shaft replacement method:

Use a keycap puller to unplug the key caps.

Pull out the switch with a switch puller.

Check the installation position of the switch to be replaced and align the hole positions.

Place the new switch on the slot.

Gently press the new switch to install it into the slot。

Install the keycap, you can use it normally.

Important safety and compliance information

Disposal of product and packing material

Waste Electrical and Electronic Equipment-WEEE

This symbol on the product or on its packaging indicates that this product must not be disposed of with your household waste. Instead, it is your responsibility to dispose of your waste equipment by handing it over to a designated collection point for the recycling or waste electrical and electronic equipment. The separate collection and recycling of your waste equipment at the time of disposal will help to conserve natural resource and ensure that it is recycled in a manner that protects human health and the environment. For more information about where you can drop off your waste equipment for recycling, please contact the local city office, the household waste disposal service or the shop where you purchased the product.

CE Declaration of Conformity

This device complies with the requirements set out in the Council Directive on the Approximation of the Laws of the Member States relating to Electromagnetic Compatibility Directive (2014/30/EU), RoHS directive (2011/65/EU) and Radio Equipment Directive (2014/53/EU)(for Radio Equipment)

This product has been tested and found to comply with the harmonized standards for Information Technology Equipment, these harmonized standards published under Directives of Official Journal of the European Union.

Federal Communications Commission (FCC) Notice

This equipment has been tested and found to comply with the limits for a Class B digital device, pursuant to Part 15 of the FCC Rules. These limits are designed to provide reasonable protection against harmful interference in a residential installation. This equipment generates, uses and can radiate radio frequency energy and, if not installed and used in accordance with the instructions, may cause harmful interference to radio communications.

However, there is no guarantee that interference will not occur in a particular installation. If this equipment does cause harmful interference to radio or television reception, which can be determined by turning the equipment off and on, the user is encouraged to try to correct the interference by one or more of the following measures:

- Reorient or relocate the receiving antenna.
- Increase the separation between the equipment and receiver.
- Connect the equipment into an outlet on a circuit different from that to which the receiver is connected.
- Consult the dealer or an experienced radio/TV technician for help.

Changes or modifications not expressly approved by the party responsible for compliance could void the user's authority to operate the equipment.

THIS CLASS B DIGITAL APPARATUS MEETS ALL REQUIREMENTS OF THE CANADIAN INTERFERENCE - CAUSING EQUIPMENT REGULATIONS.

FCC Compliance Statement

This device complies with Part 15 of the FCC Rules. Operation is subject to the following two conditions: (1) this device may not cause harmful interference, and (2) this device must accept any interference received, including
interference that may cause undesired operation.

Commission Federale de la Communication

Cet équipement a été testé et déclaré conforme auxlimites des appareils numériques de class B,aux termes de l'article 15 Des règles de la FCC. Ces limites sont conçues de façon à fourir une protection raisonnable contre les interferences nuisibles dans le cadre d'une installation résidentielle.

CET appareil produit, utilise et peut émettre des hyperfréquences qui, si l'appareil n'est pas installé et utilisé selon les consignes données, peuvent causer des interferences nuisibles aux communications radio. Cependant, rien ne peut garantir l'absence d'interférences dans le cadre d'une installation particulière. Si cet appareil est la cause d'interférences nuisibles pour la réception des signaux de radio ou de télévision, ce qui peut être décelé en fermant l'équipement, puis en le remettant en fonction, l'utilisateur pourrait essayer de corriger la situation en prenant les mesures suivantes:

- Réorienter ou déplacer l'antenne de réception.
- Augmenter la distance entre l'équipement et le récepteur.
- Brancher l'équipement sur un autre circuit que celui utilisé par le récepteur.
- Demander l'aide du marchand ou d'un technicien chevronné en radio/ télévision.

Toutes modifications n'ayant pas reçu l'approbation des services compétents en matière de conformité est susceptible d'interdire à l'utilisateur l'usage du present équipement.

CET APPAREIL NUMERIQUE DE LA CLASSE B RESPECTE TOUTES LES EXIGENCES DU REGLEMENT SUR LE MATERIEL BROUILLEUR DU CANADA.

ROYALAXE

Dear customer,
Thank you for purchasing a ROYALAXE accessory product. To ensure you a reliable after-sales service, please read the following instructions carefully. This product warranty period is valid for one year from the date of purchase (the date of receipt of the return receipt and the invoice date of the buyer).

The following situations are not covered by after-sales service :
1. Unable to provide a valid warranty card and invoice (not including those that can prove the products is within the valid warranty period) or the alteration of the warranty without authorization.
2. The product model and serial number on the warranty card are not in conformity with the physical product or without the distributor seal.
3. The model number, serial number or production date code on the product has been altered, removed or made illegible.
4. The defect is the result of excessive use outside the intended purpose, e.g. non-stop use in a commercial environment.
5. Damage due to not used in accordance with product instructions.
6. Damage caused by the use of pirated software or computer virus during use.
7. Damage caused by accident, damage, or repair from unauthorized service vendors.
8. Damage caused by force majeure.
9. The product does not work properly due to missing connection caused by accident, signal interference or other influential factors during use.
10.For normal wear and tear defects, or by their nature consumable parts.
11. The product does not function properly because it was not originally designed, manufactured or approved for use in the country where you use the product, which might occur when you imported the product.

If the functions of the product which you had purchased are defected or can not be used normally, please contact your local retailer.

The serial number of the product filled in the form must be consistent with the actual product. This certificate the primary instrument for the after-sales service, please safe keep it. If you need technical support, please show this warranty card, and we will provide quality and professional services.

Commodity Information	Name	
	Place of origin	
	Model No.	
	Serial No.	
User info.	Name	
	Address	
	Tel.	
	Postcode	
Sales info.	Retailer	
	Address	
	Tel.	
	Postcode	
	Sale date	
	Invoice No.	
	Stamp & Signature	

Dear customer, the above information is to be filled in by the seller. Please cooperate with us. Thank you !

The following information shall be filled in by the maintenance agency and returned to the customer.

Maintenance info.	Maintenance company name	
	Address	
	Tel.	
	Postcode	
	Document No.	
	Date	
	Signature	